IO/EXT2

Digital I/O-Extension

Hardware Reference

SSV Software Systems GmbH
Dünenweg 5
D-30419 Hannover
Phone: +49 (0)511/40 000-0
Fax: +49 (0)511/40 000-40
E-mail: sales@ssv-embedded.de

Document Revision: 1.4
Date: 2023-05-22

CONTENT

1 INTRODUCTION

This document describes the basic hardware components IO/EXT2.

1.1 Safety Guidelines

Please read the following safety guidelines carefully! In case of property or personal damage by not paying attention to this document and/or by incorrect handling, we do not assume liability. In such cases any warranty claim expires.

ATTENTION!
Observe precautions for handling – electrostatic sensitive device!

- Do NOT turn on the power supply while connecting any cables, especially the power cables. This could cause damaged board components! First connect the cables and THEN turn the power supply on.
- Discharge yourself before you work with the device, e.g. by touching a heater of metal, to avoid damages.
- Stay grounded while working with the device to avoid damage through electrostatic discharge.

1.2 Conventions

Convention	Usage
bold	Important terms
`monospace`	Pathnames, internet addresses and program code

Table 1: Conventions used in this document

1.3 Features and Technical Data

Interfaces	
Ethernet	2x 10/100 Mbps (RJ45)
USB	2x USB 2.0 host 1x USB 2.0 device
Service	1x USB 2.0 device
Digital I/O	4x Digital input 4x Digital output
Displays / Control Elements	
LEDs	1x Power 5x User programmable 2x LAN LED for Ethernet interface LAN1 2x LAN LED for Ethernet interface LAN2
Electrical Characteristics	
Power supply	24 VDC ±10% from external power supply
Power consumption	< 5 W (without connected USB host devices)
Potential separation	500 VDC between system section and power section
Mechanical Characteristics	
Protection class	IP20 industrial case for 35 mm DIN-rail mounting
Mass	< 270 g
Dimensions	112 mm x 100 mm x 45 mm
Operating temperature	0 .. 70 °C
Standards and Certifications	
EMC	CE
EMC interference immunity	EN 61000 6-2
EMC interference emission	EN 61000 6-4
Environmental standards	RoHS, WEEE

Table 2: Features

2 OVERVIEW

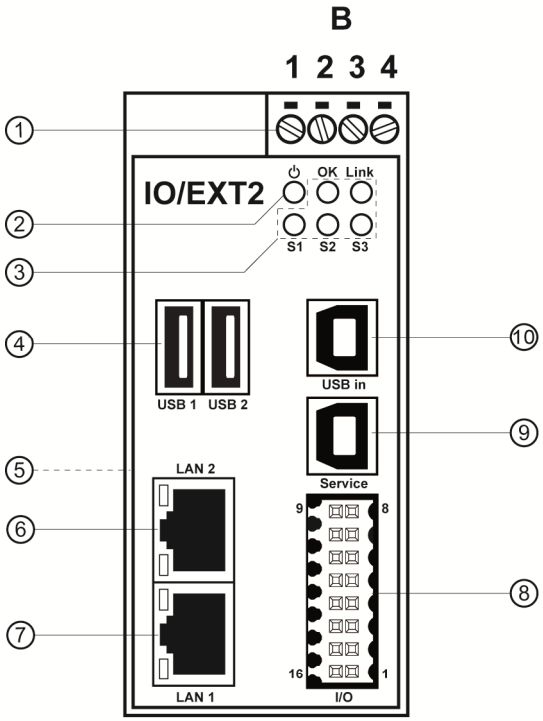

① Screw terminals
② Power LED
③ User LEDs (programmable)
④ USB hosts ports
⑤ DIN-rail mounting (backside)
⑥ Ethernet interface LAN 2
⑦ Ethernet interface LAN 1
⑧ Digital I/O interface
⑨ Service port (USB device)
⑩ USB device port

Figure 1: Overview IO/EXT2

3 INTERFACES

3.1 Ethernet LAN 1 and LAN 2

Pin	Name	Function
1	TX+	10/100 Mbps LAN, TX+ Pin
2	TX-	10/100 Mbps LAN, TX- Pin
3	RX+	10/100 Mbps LAN, RX+ Pin
4	---	Bob-Smith Termination
5	---	Bob-Smith Termination
6	RX-	10/100 Mbps LAN, RX- Pin
7	---	Bob-Smith Termination
8	---	Bob-Smith Termination

Table 3: Pinout Ethernet interfaces

The Ethernet interfaces offer each two LEDs. The following table shows their functions.

Status	Green LED	Yellow LED
OFF	No link, no traffic	10 Mbps connection
ON	Link established	100 Mbps connection
BLINK	Traffic	---

Table 4: LAN LEDs

3.2 USB 1 and USB 2 Hosts Port

Pin	Name	Function
1	VCC5	5 VDC Power Output (500 mA max. per Port)
2	DATA-	USB Host -
3	DATA+	USB Host +
4	GND	Ground

Table 5: Pinout USB host ports

3.3 USB in Device Port

This port is for the upstream connection to the IGW system.

Pin	Name	Function
1	VCC5	5 VDC Power Input
2	DATA-	USB Host -
3	DATA+	USB Host +
4	GND	Ground

Table 6: Pinout USB in device port

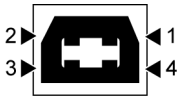

3.4 Service Port

The Service port is a standard USB serial device.

Pin	Name	Function
1	VCC5	5 VDC Power Input
2	DATA-	USB Host -
3	DATA+	USB Host +
4	GND	Ground

Table 7: Pinout Service port

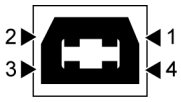

Please note:
You will need an FTDI driver package for an **FT230 chip** to communicate.

3.5 Digital I/O

Pin	Name	Function
1	DIN1+	Digital Input 1+
2	DIN2+	Digital Input 2+
3	DIN3+	Digital Input 3+
4	DIN4+	Digital Input 4+
5	DOUT1+	Digital Output 1+
6	DOUT2+	Digital Output 2+
7	DOUT3+	Digital Output 3+
8	DOUT4+	Digital Output 4+
9	DOUT4-	Digital Output 4-
10	DOUT3-	Digital Output 3-
11	DOUT2-	Digital Output 2-
12	DOUT1-	Digital Output 1-
13	DIN4-	Digital Input 4-
14	DIN3-	Digital Input 3-
15	DIN2-	Digital Input 2-
16	DIN1-	Digital Input 1-

Table 8: Pinout digital I/O interface

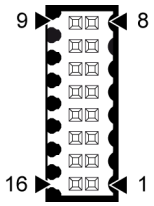

Onboard connector = **Weidmüller S2L 3.50/16/90G 3.5SN BK BX**
Order code **#1728040000**

Mating plug = **Weidmüller B2CF 3.50/16/180 SN BK BX**
Order code **# 1277530000**

Properties of Digital Inputs	
V_{in} Logic 0	0 .. 8 VDC
V_{in} Logic 1	18 .. 30 VDC
Reverse Polarity Protection	Up to 30 VDC
Input Frequency	10 Hz max.
Properties of Digital Outputs (Bidirectional Switch)	
V_{switch}	30 VDC max.
I_{switch}	400 mA max.
Over-current Protection	No
Over-voltage Protection	Yes
Output Frequency	10 Hz

Table 9: Properties of digital inputs and outputs

3.6 Front Panel LEDs

Name	Color	Function
⏻ (Power)	Green	Permanent on when power supply is established
OK	Green	Free programmable (depends on firmware)
Link	Green	Free programmable (depends on firmware)
S1	Yellow	Free programmable (depends on firmware)
S2	Yellow	Free programmable (depends on firmware)
S3	Yellow	Free programmable (depends on firmware)

Table 10: Function of front panel LEDs

4 POWER SUPPLY

The IO/EXT2 needs a supply voltage of 24 VDC ±10% to work. Use one external power supply to provide both, the IO/EXT2 as well as the IGW/936-L with the necessary power like shown in the figure below.

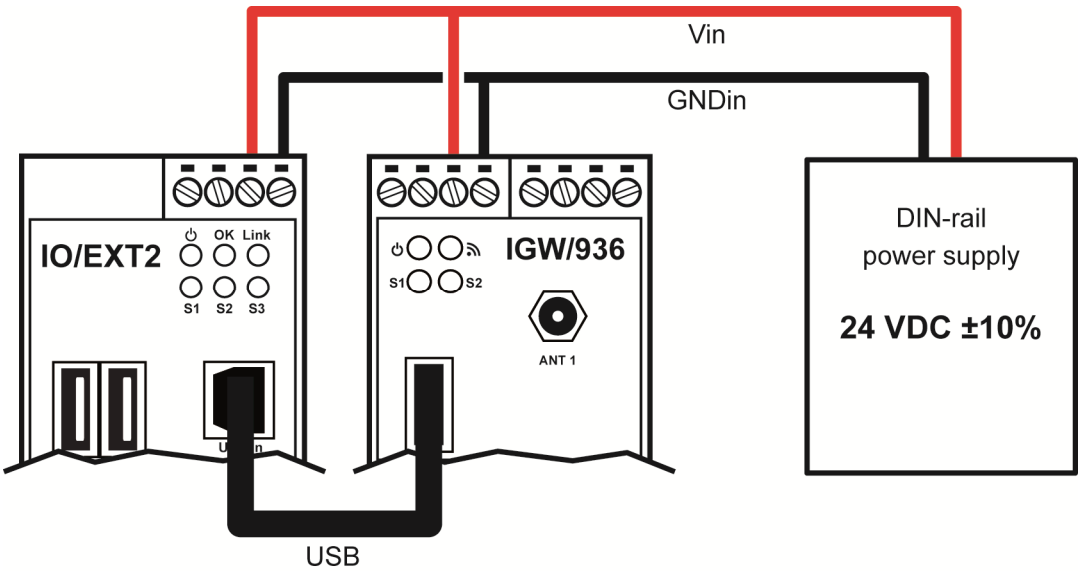

Figure 2: Power supply for the IO/EXT2 and the IGW/936-L

Terminal IO/EXT2	Terminal IGW/936-L	Signal
B3	**A3**	Vin 24 VDC ±10%
B4	**A4**	GNDin

Table 11: Screw terminals for power supply

CAUTION!
Providing the IO/EXT2 (and the IGW/936-L) with a higher voltage than the regular 24 VDC ±10% could cause damaged board components!

Do NOT turn on the power supply while connecting any cables, especially the power cables. This could cause damaged board components! First connect the (power) cables and THEN turn the power supply on.

IMPORTANT!
Use ONE external power supply for both, the IO/EXT2 as well as the IGW/936-L, to avoid unwanted potential differences between the devices.

The cable for the power supply must not be longer than **3 meters**!

5 HELPFUL LITERATURE

- IGW/936-L hardware reference

CONTACT

SSV Software Systems GmbH
Dünenweg 5
D-30419 Hannover

Phone: +49 (0)511/40 000-0
Fax: +49 (0)511/40 000-40
E-mail: sales@ssv-embedded.de

Internet: www.ssv-embedded.de
Forum: www.ssv-comm.de/forum
LinkedIn: www.linkedin.com/company/ssv-software-systems

DOCUMENT HISTORY

Revision	Date	Remarks	Name	Review
1.0	2016-03-01	First version	WBU	FKI
1.1	2016-04-07	Added safety advice in chapter 1.1, Edited chapter 4	WBU	SSC
1.2	2017-07-26	Corrected table 8 (reversed plus and minus)	WBU	HNE
1.3	2018-01-29	Corrected pin numbering of digital I/O interface in figure 1 and table 8. Corrected information about over-current protection in table 9.	WBU	FKI
1.4	2023-05-22	Changed part number and order code of mating plug	WBU	FKI